SOLACE

POOL GATE CLOSER

AUSTRALIAN DESIGNED & ENGINEERED

OUR QUALITY IS YOUR PROTECTION

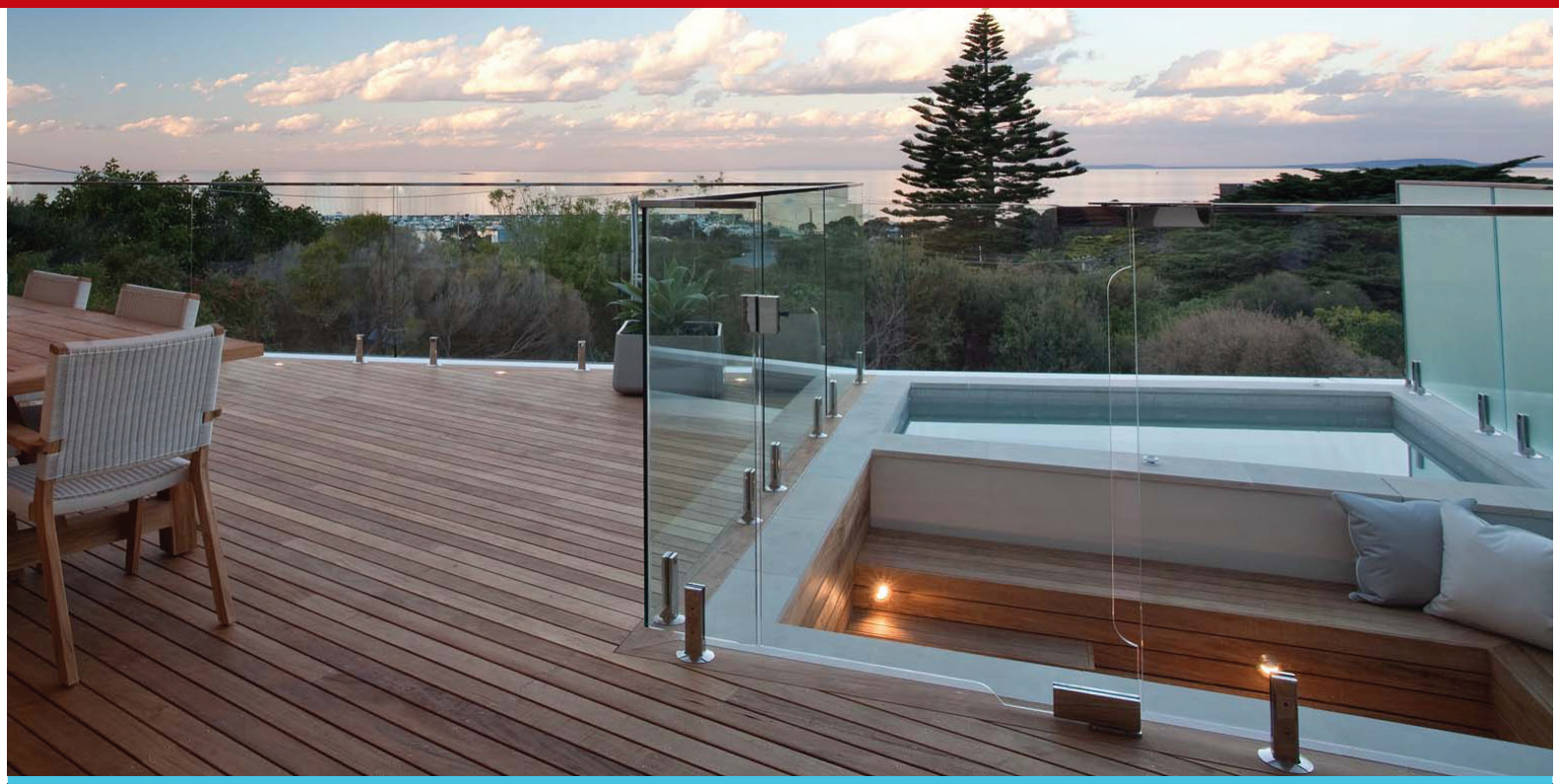

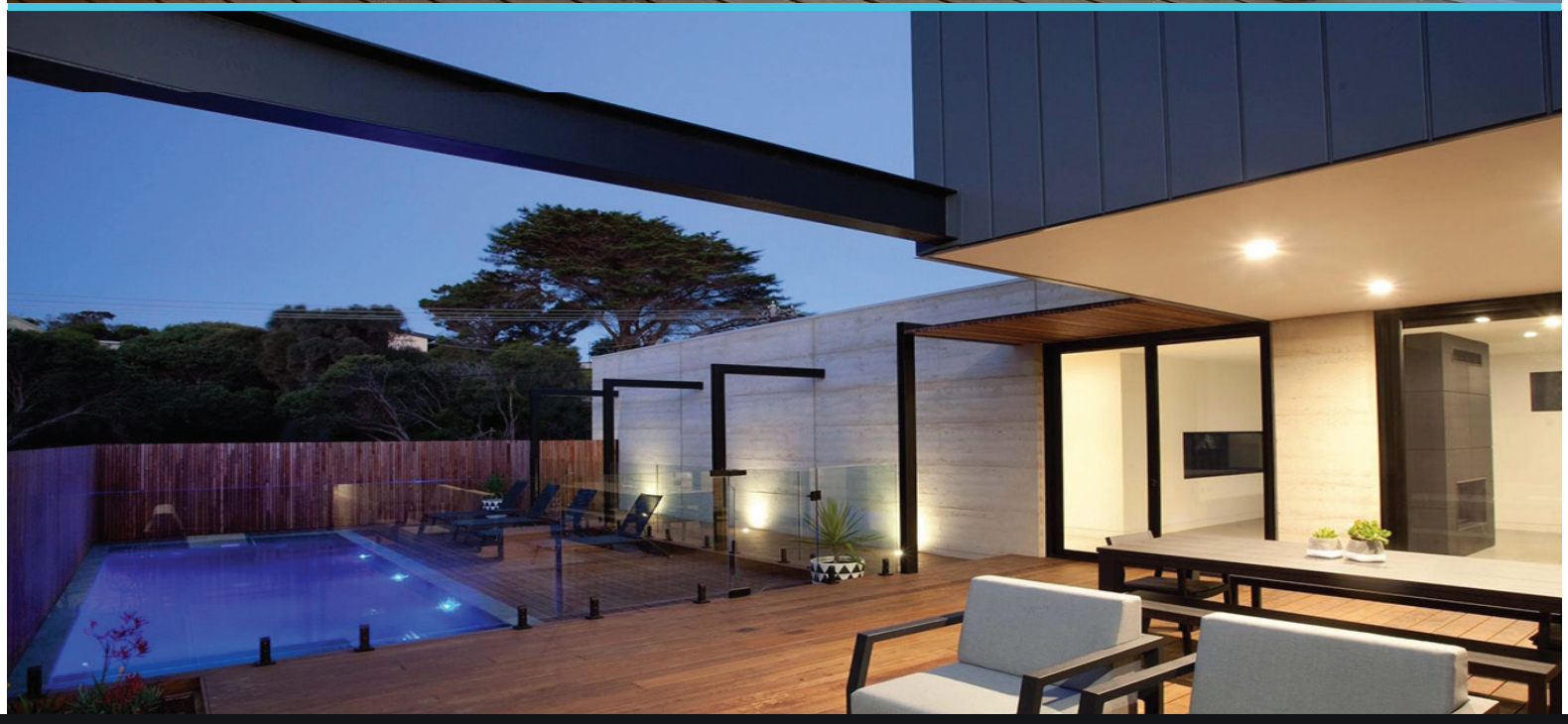

THE PROFESSIONAL POOL GATE HARDWARE RANGE

WE LOVE HARDWARE

DESIGNED FOR A SMOOTH, CONTROLLED CLOSE

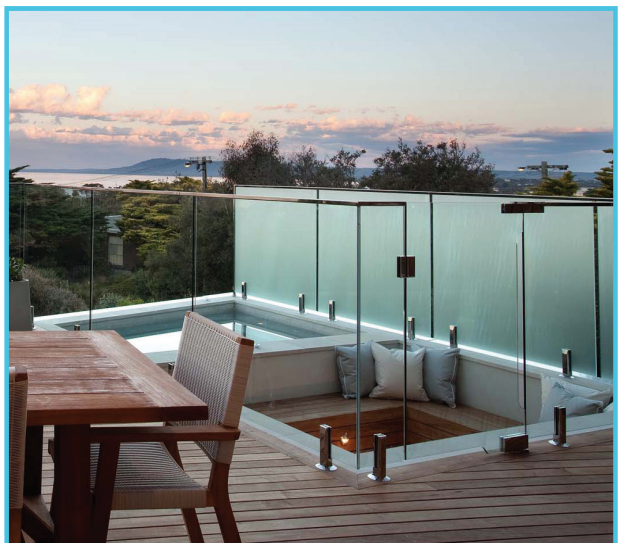

Solace is a soft-closing pool gate solution engineered for Australian conditions. Adjustable closing action and flexible installation configurations support a wide range of frameless glass pool gate applications.

Original 2019 brochure references testing to 40,000 cycles and compliance with AS 1926.1:2012. Confirm applicable current standards and certification before specifying.

TECHNICAL HIGHLIGHTS

- Suitable for 10 mm and 12 mm glass
- Maximum gate weight: 100 kg
- Maximum gate width: 1000 mm
- Double-valve speed adjustment
- Base, wall and glass mounting options
- Polished stainless, satin stainless and black finishes
- Aluminium closer body; 316 stainless cover plates

Technical information adapted from the supplied 2019 Solace reference; confirm current approvals.

CHOOSE THE RIGHT CONFIGURATION

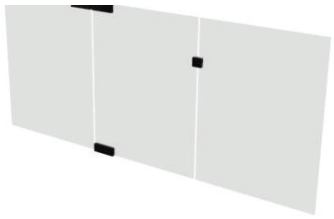

Glass to Glass 180°

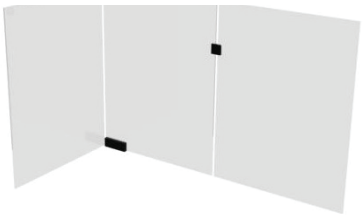

Glass to Glass 90°

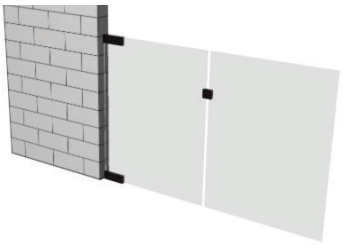

Glass to Wall/Post



Base Mount



Wall Mount

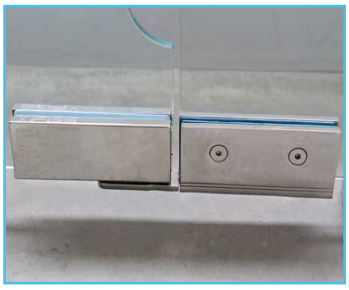

Glass Mount 180°

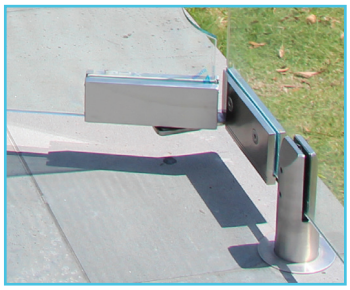

Glass Mount 90°

BASE, WALL & GLASS MOUNT SYSTEMS

BASE MOUNTED CONFIGURATION

SOL KIT1
Glass to Wall

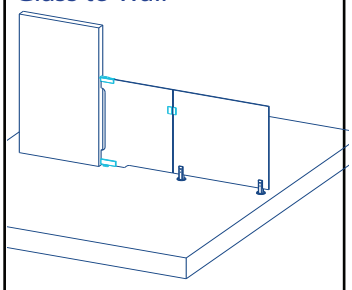

SOL KIT2
Glass to Glass 180 °

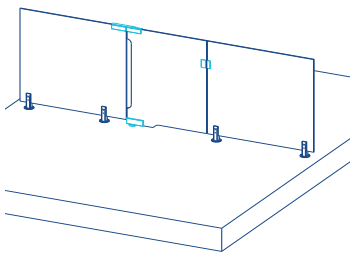

SOL KIT5
Glass to Glass 90 ° Left

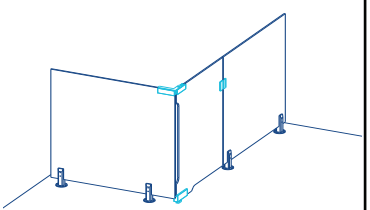

SOL KIT6
Glass to Glass 90 ° deg Right

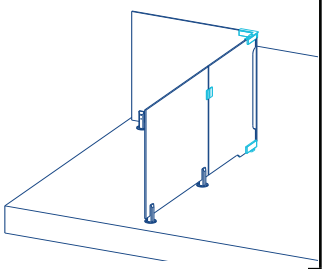

WALL & GLASS MOUNTED CONFIGURATIONS

SOL KIT3
Glass to Wall

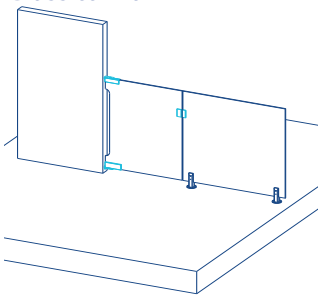

SOL KIT4
Glass to Glass 180 °

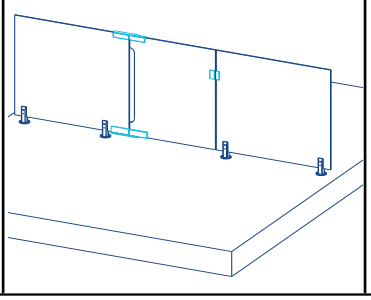

SOL KIT7
Glass to Glass 90 ° Left

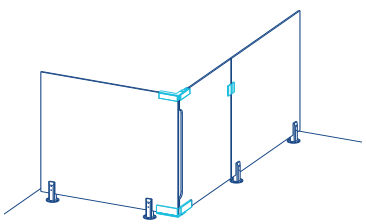

SOL KIT8
Glass to Glass 90 ° deg Right

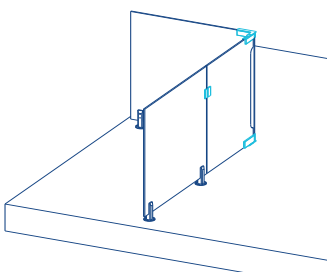

COMPLETE FRAMELESS POOL FENCING SOLUTIONS



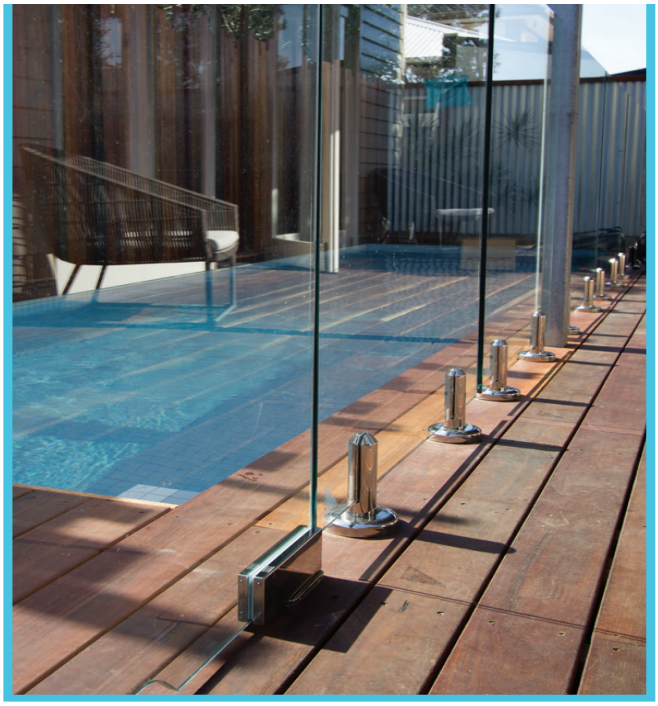

GLASS & HARDWARE FROM ONE SUPPLIER

- 12 mm Grade A toughened safety glass
- Flat polished edges
- Pool gates and hinging panels for Solace systems
- Selected panels from 200–2000 mm, in 50 mm increments
- Engineered product recommendations for Australian applications

ELITE TRADE PORTAL

Order online, explore our extensive hardware range and request pricing.

WWW.ELITEGLASSSOLUTIONS.COM.AU

SPF20

TOP COMMERCIAL PATCH

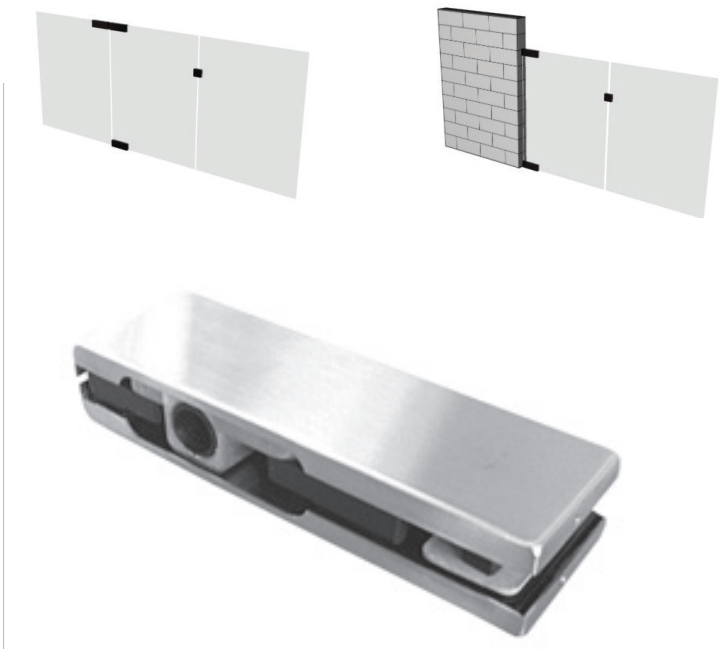

Top Commercial Patch

Technical Details

- Pivot point can be set between 55 - 65mm
- 316 Grade Stainless Steel Cover Plates
- Suitable for 10 or 12mm glass
- Maximum door weight = 100kg
- Pivot point set at 55mm or 65mm
- Compatible with all EGS pivots

Available Finishes

- #316 Satin stainless steel
- #316 Polished stainless steel
- #316 Electroplated black

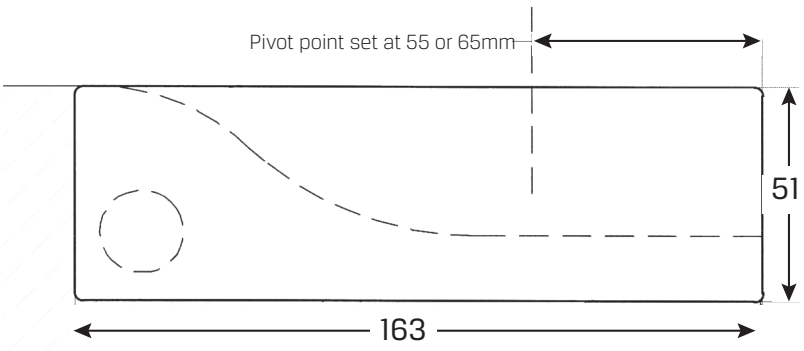

ELEVATION

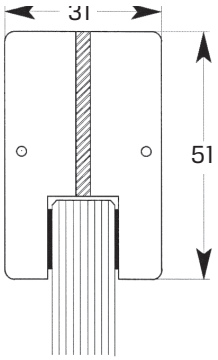

END VIEW

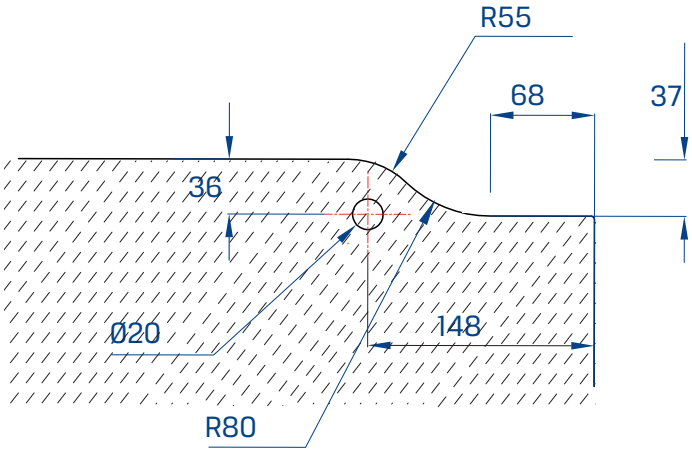

GLASS DETAIL

FPF1

GLASS-TO-WALL PIVOT

Slimline Glass to Wall Pivot

Technical Details

- Used on pool gates in conjunction with a top patch fitting to allow the gate to pivot from a wall or post.
- Can be attached to a wall or post - use M6 countersunk stainless steel or 14G

COMPATIBLE WITH

SPF20 Top Commercial Patch
Solace Wall Mount (SOL WM)

Available Finishes

- 316 satin stainless steel
- 316 polished stainless steel
- Electroplated black

Specify at time of order

- Required finish

Available to be purchased as part of a Solace Self Closing Pool Gate Kit
SOL KIT1 - Base Mount
SOL KIT3 - Wall Mount

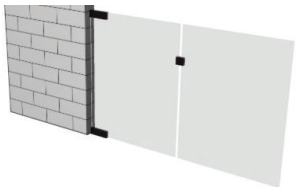



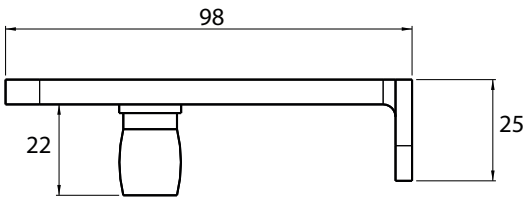

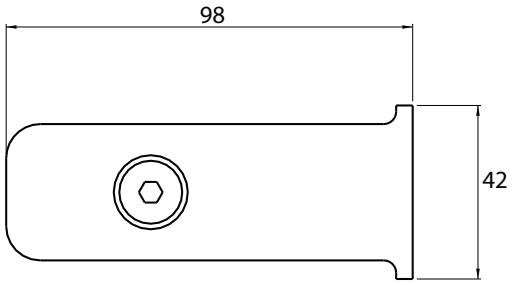

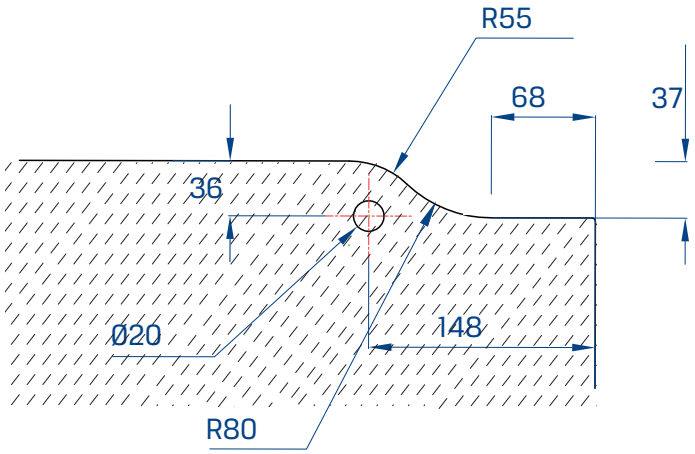

GLASS DETAIL - TOP OF GATE

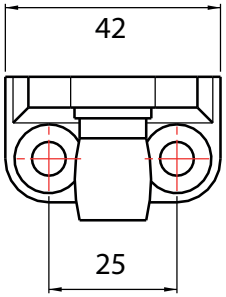

FPF7

180° GLASS-TO-GLASS PIVOT

180 degree Slimline Glass to Glass Pivot

Technical Details

- Used on pool gates with 2 top patch fittings to allow the gate to pivot from another glass panel
- Fixing screws provided with Top Patch Fitting

COMPATIBLE WITH

SPF20 Top Commercial Patch
Solace Glass Mount (SOL GM 180)

Available Finishes

- 316 satin stainless steel
- 316 polished stainless steel
- Electroplated black

Specify at time of order

- Required finish

Available to be purchased as part of a Solace Self Closing Pool Gate Kit
SOL KIT2 - Base Mount
SOL KIT4 - Glass Mount

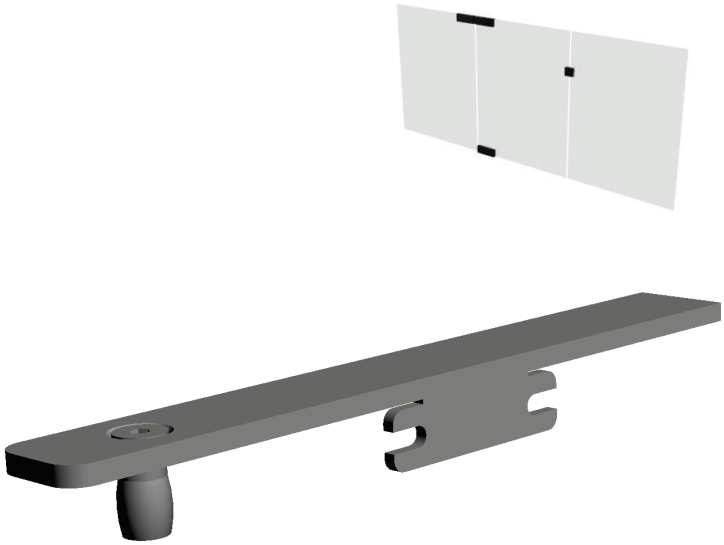

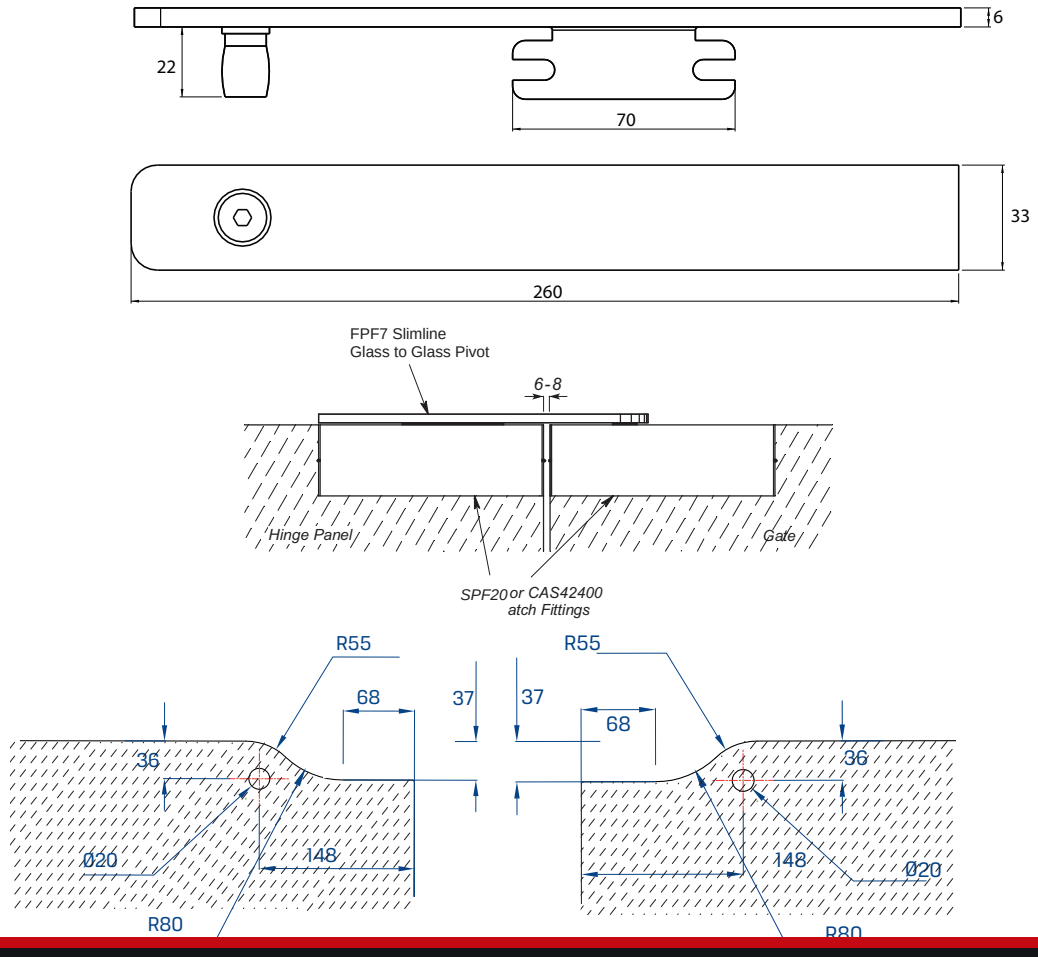

FPF790

90° GLASS-TO-GLASS PIVOT

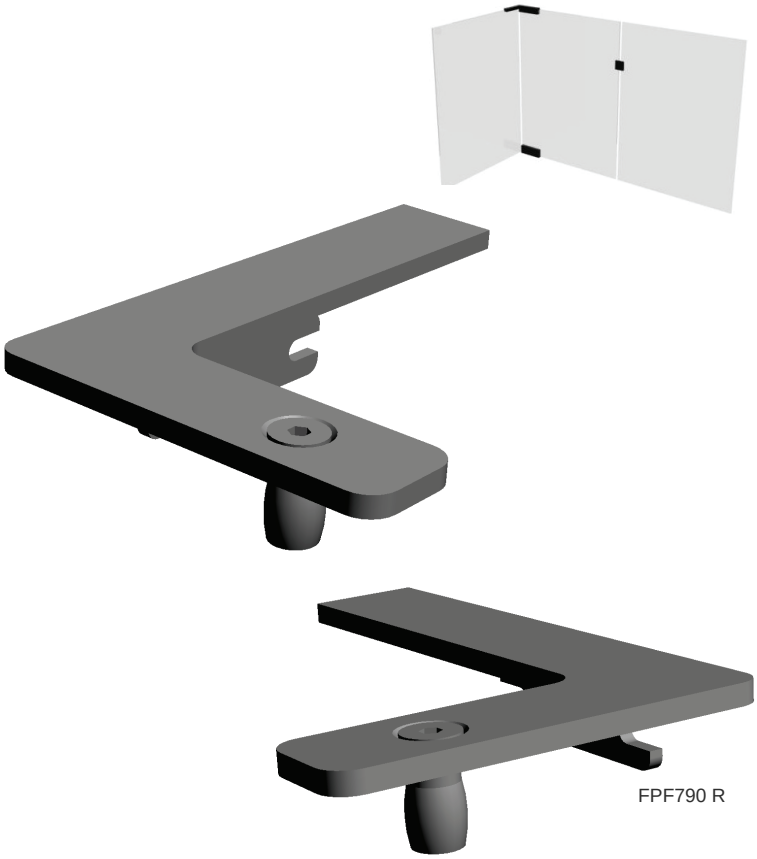

90 degree Slimline Glass to Glass Pivot

Technical Details

- Used on pool gates in conjunction with 2 top patch fittings to allow the gate to pivot from another glass panel at 90 degrees
- Left and Right configurations available Specify at time of order

Available Finishes

- 316 satin stainless steel
- 316 polished stainless steel
- Electroplated black

Specify at time of order

· FPF790 L - Left

· FPF790 R - Right

Available to be purchased as part of a Solace Self Closing Pool Gate Kit
SOL KIT5 - Left Base Mount
SOL KIT6 - Right Base Mount
SOL KIT7 - Left Glass Mount
SOL KIT8 - Right Glass Mount

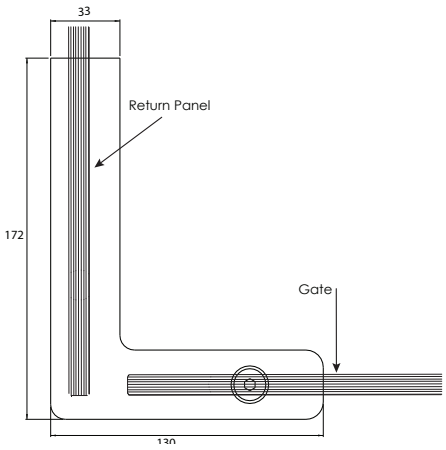

FPF790 L Left configuration

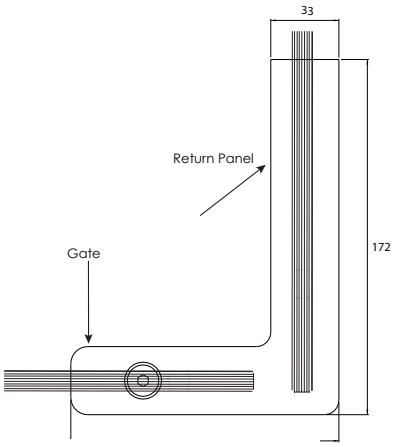

FPF790 R Right configuration

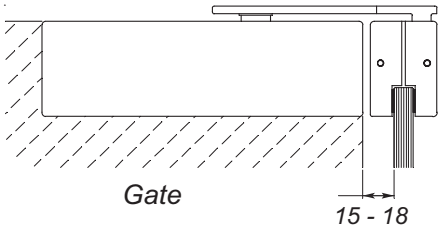

Allow 15-18mm Gap between gate & hinge panel

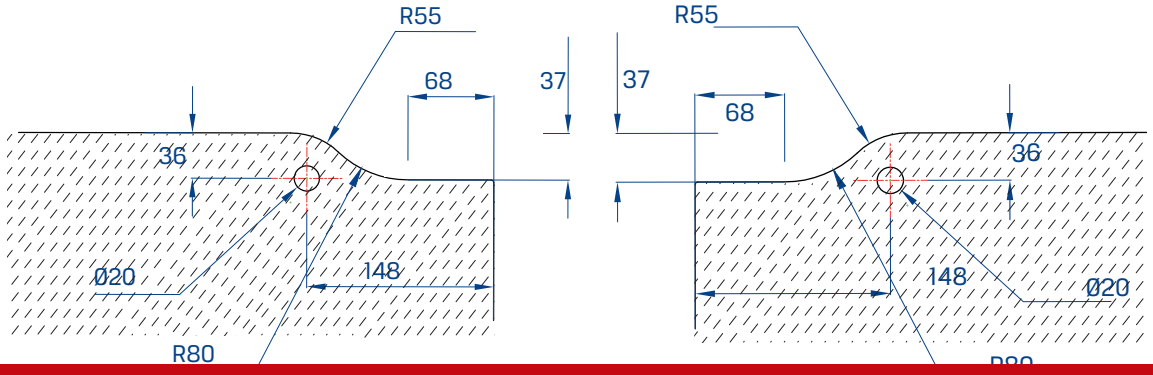

SOLACE

SELF-CLOSING POOL GATE CLOSER

GATE CLOSER FOR OUTDOOR USE

Solace Self Closing Gate Closer

Technical Details

- Non Hold Open Pool Gate Closer suitable for outdoor use
- Available in Base, Wall & Glass Mount options
- Tested successfully to over 40,000 cycles and been subjected to temperatures ranging from -5^{0}C to +55^{0}C in FGS dedicated on site test lab
- Tested by an independent NATA accredited lab and compliant with AS 1926-1 2012
- Supplied with Anti-Corrosion Seal
- Suitable for 10 or 12mm glass thickness
- Maximum Weight - 100kg
- Maximum Panel Width - 1000mm
- Dual Action - left or right handed
- Two Valve Speed Adjustment Process

Available Finishes

- 316 satin stainless steel
- 316 polished stainless steel
- Black

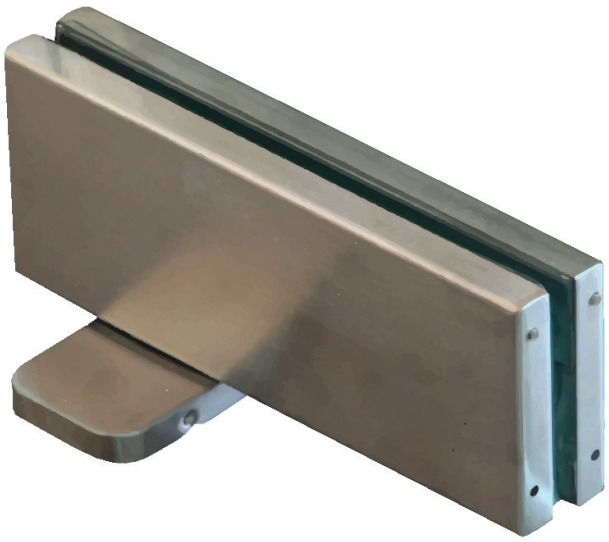

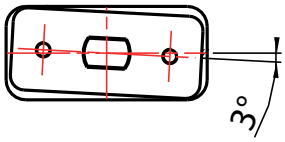

Ensure the gate is plumb and level and is in a closing position 2-3 degrees past the latching point as shown above. This is important to ensure proper functioning of the latch.

Specify at time of order

Available as part of a Solace Pool Gate Kit which includes all hardware required for top and bottom pivots and patches · SOL KIT

· Required finish
· Pool fence configuration
· Base / Glass / Wall Mount
· Friction Fit Latch (PL2 FF) or No Latch (NL)
· Pronto Gate in Clear or Crystal Clear

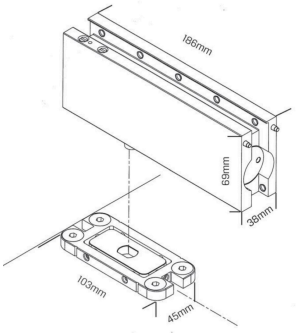

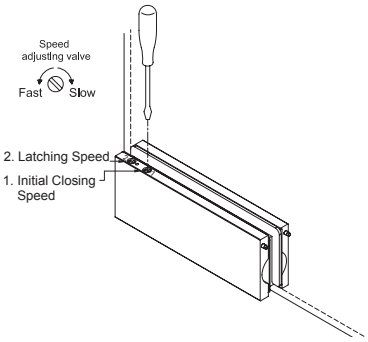

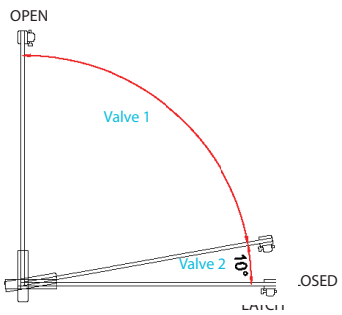

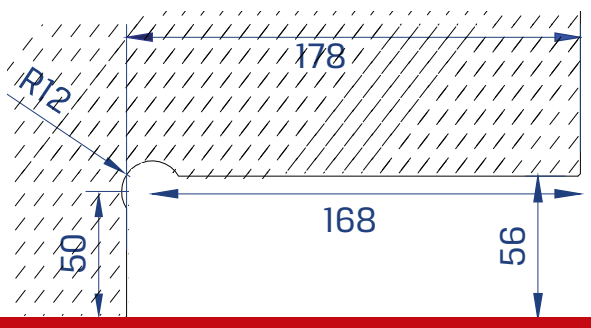

PL2 FF

FRICTION FIT POOL GATE LATCH

Glass to Glass Friction Fit Pool Gate Latch

Technical Details

- Used on pool gates in 180 degree glass to glass configurations
- Suitable for 12mm glass.
- Friction fit, so no holes required for a strike/ latch panel and can be installed with any fixed panel.

Available Finishes

- 316 satin stainless steel
- 316 polished stainless steel
- Electroplated black

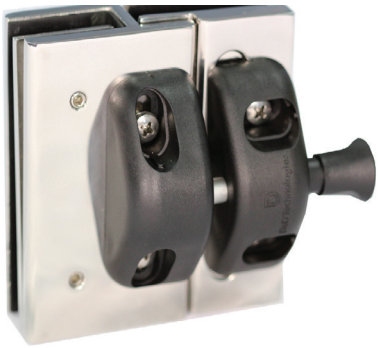



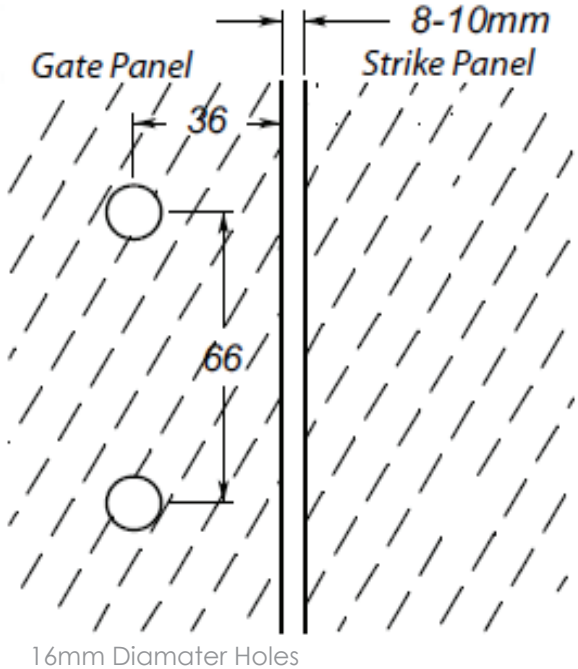

16mm Diamater Holes

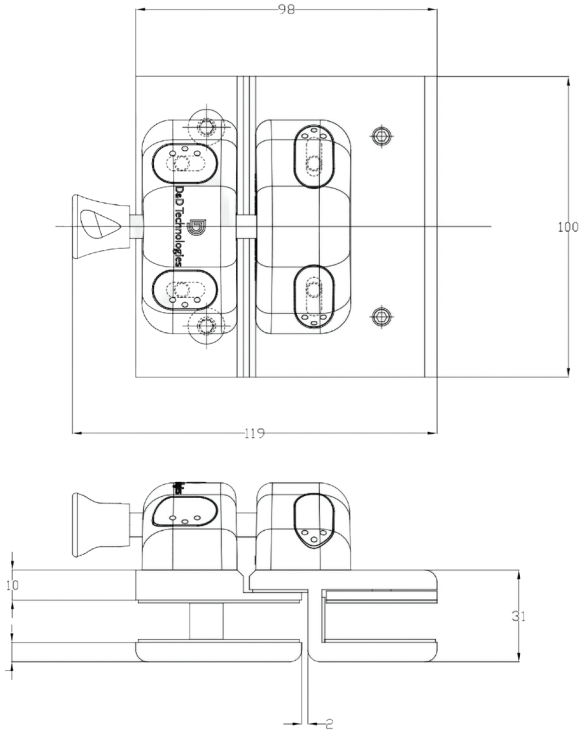

SOL WM

WALL MOUNT SYSTEM

Solace Wall Mount

Technical Details

- Used when hinging a Pool Gate off a wall or post
- Fitted to the base of a pool gate to mount a Solace Pool Gate Closer.
- Supplied with Spindle Receiver Plate which is adjusted from the underside of the fitting using an M8 Ring Spanner. Torque to 14Nm
- Can be attached to a wall or post - use M6 countersunk Stainless Steel or 14G Wood Screws

Compatible with:

- FPF1 Glass to Wall Top Pivot
- Solace Pool Gate Closer

Available Finishes

- 316 satin stainless steel
- 316 polished stainless steel
- Black

Specify at time of order

- Required finish

Available to be purchased as part of a Solace Self Closing Pool Gate Kit
SOL KIT3 - Wall Mount

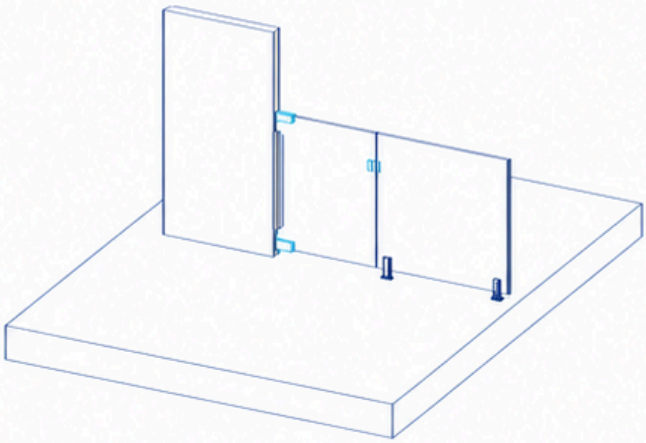



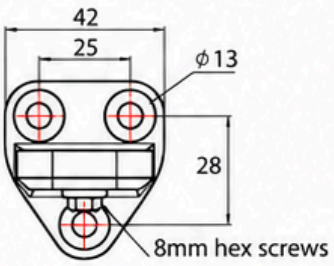

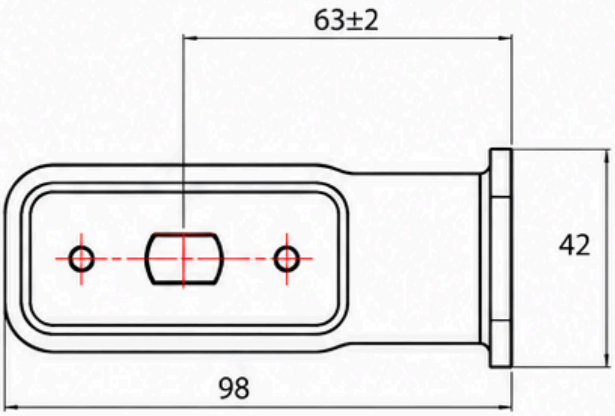

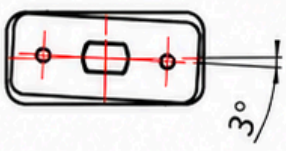

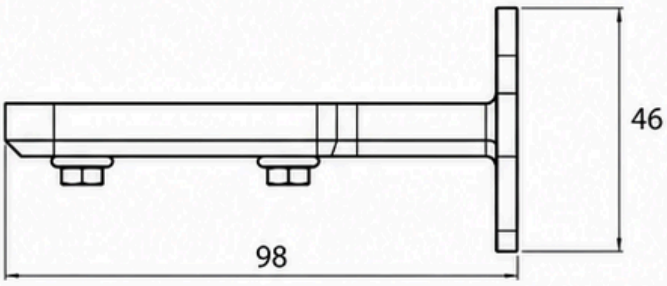

Ensure the gate is plumb and level and is in a closing position 2-3° past the latching point. This is important to ensure proper functioning of the latch.

SOL GM 180

180° GLASS MOUNT

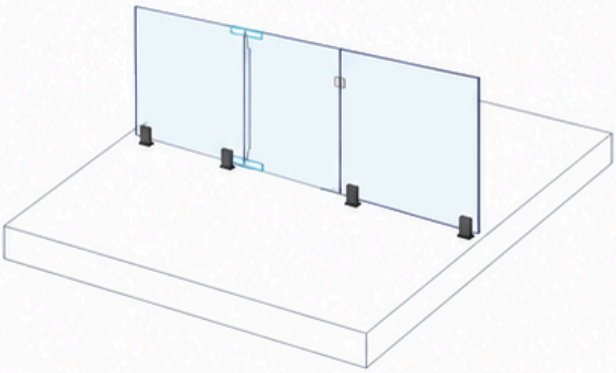

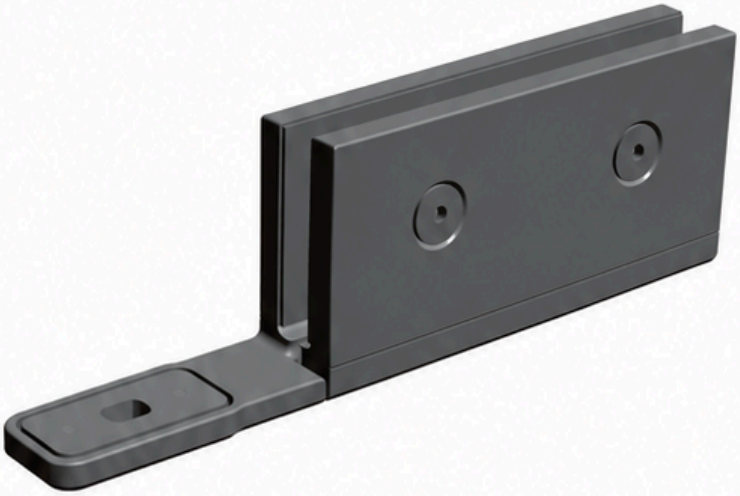

Solace Glass Mount 180 degree

Technical Details

- Used when hinging a Pool Gate off another Glass Panel
- Fitted to the base of a pool gate and hinge panel to mount a Solace Pool Gate Closer.
- Supplied with Spindle Receiver Plate which is adjusted from the underside of the fitting using an M8 Ring Spanner. Torque to 14Nm

Compatible with:

- FPF7 Glass to Glass Top Pivot
- Solace Pool Gate Closer

Available Finishes

- 316 satin stainless steel
- 316 polished stainless steel
- Electroplated black

Specify at time of order

- Required finish

Available to be purchased as part of a Solace Self Closing Pool Gate Kit
SOL KIT4 - Glass Mount

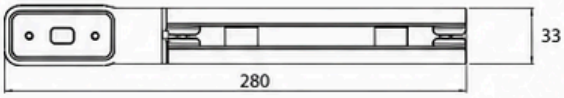

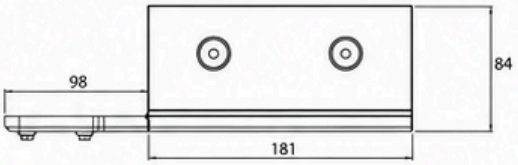

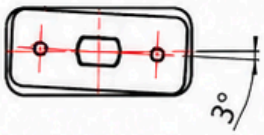

Ensure the gate is plumb and level and is in a closing position 2-3 degrees past the latching point as shown above. This is important to ensure proper functioning of the latch.

Ensure the gate is plumb and level and is in a closing position 2-3° past the latching point. This is important to ensure proper functioning of the latch.

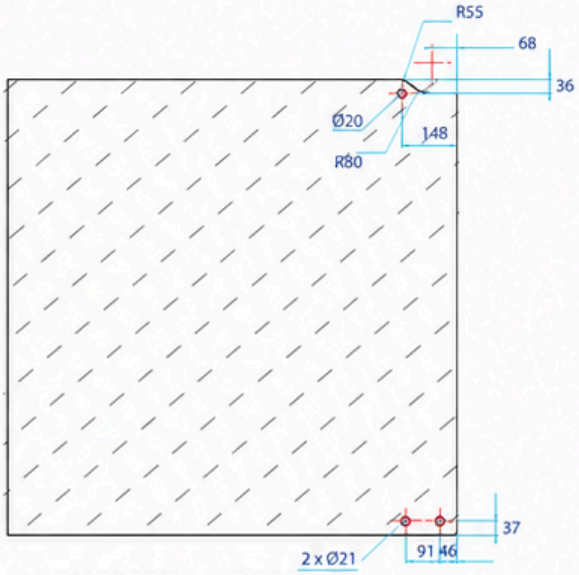

GLASS DETAIL - HINGE PANEL

SOL GM 90

90° GLASS MOUNT

Solace Glass Mount 90 degree

Technical Details

- Used when hinging a Pool Gate off another Glass Panel at 90 degrees
- Fitted to the base of a pool gate and hinge panel to mount a Solace Pool Gate Closer.
- Supplied with Spindle Receiver Plate which is adjusted from the underside of the fitting using an M8 Ring Spanner. Torque to 14Nm
- Left and Right configurations available

Compatible with:

- FPF790 Glass to Glass Top Pivot
- Solace Pool Gate Closer

Available Finishes

- 316 satin stainless steel
- 316 polished stainless steel
- Electroplated black

Specify at time of order

- Required finish
- SOL GM 90L - Left
- SOL GM 90R - Right

Available to be purchased as part of a Solace Self Closing Pool Gate Kit
SOL KIT7 - Glass Mount Left
SOL KIT8 - Glass Mount Right

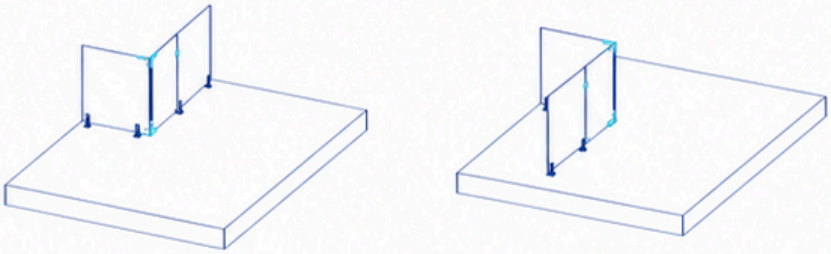

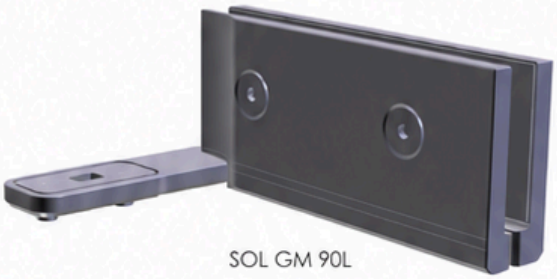

SOL GM 90L

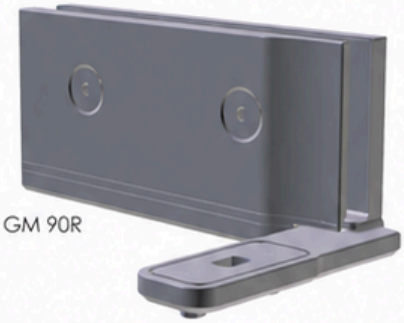

SOL GM 90R

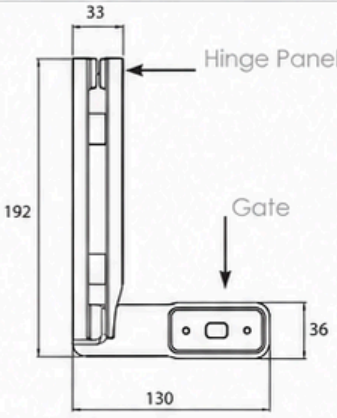

SOL GM 90L - Glass Mount Left

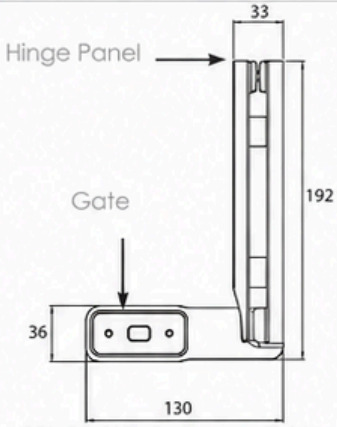

SOL GM 90R - Glass Mount Right

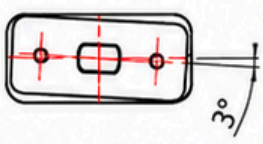

Ensure the gate is plumb and level and is is in a closing position 2-3° past the latching point. This is important to ensure proper functioning of the latch.

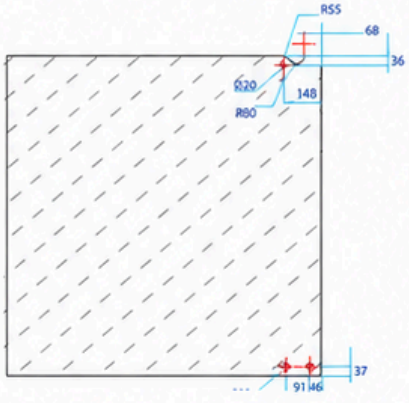

SOL PACKERS

PACKERS & ACCESSORIES

Solace 316 Stainless Steel Packers

Technical Details

- Used with Solace Pool Gate Closer Base Mount configurations
- Made from solid 316 Stainless Steel
- Used beneath the Solace Base Mount plate to raise the height
- Position according to markings representing latch end - this is important to ensure Base Mount Cover plates fit correctly.
- Available in a range of thicknesses which can be used in combination to achieve desired height.



Available Finishes

· Polished Stainless Steel
· Satin Stainless Steel
· Electroplated Black

Available Thicknesses

· ADD.100 SHIM1 - 1mm
· ADD.100 SHIM3 - 3mm
· ADD.100 SHIM5 - 5mm
· ADD.100 SHIM10 - 10mm

Specify at time of order

- Thickness
- Required Finish

